SIDE VIEW

INSULATION ADDS 4" TO THE DIAMETER AND 2" TO THE HEIGHT SHOWN BELOW.

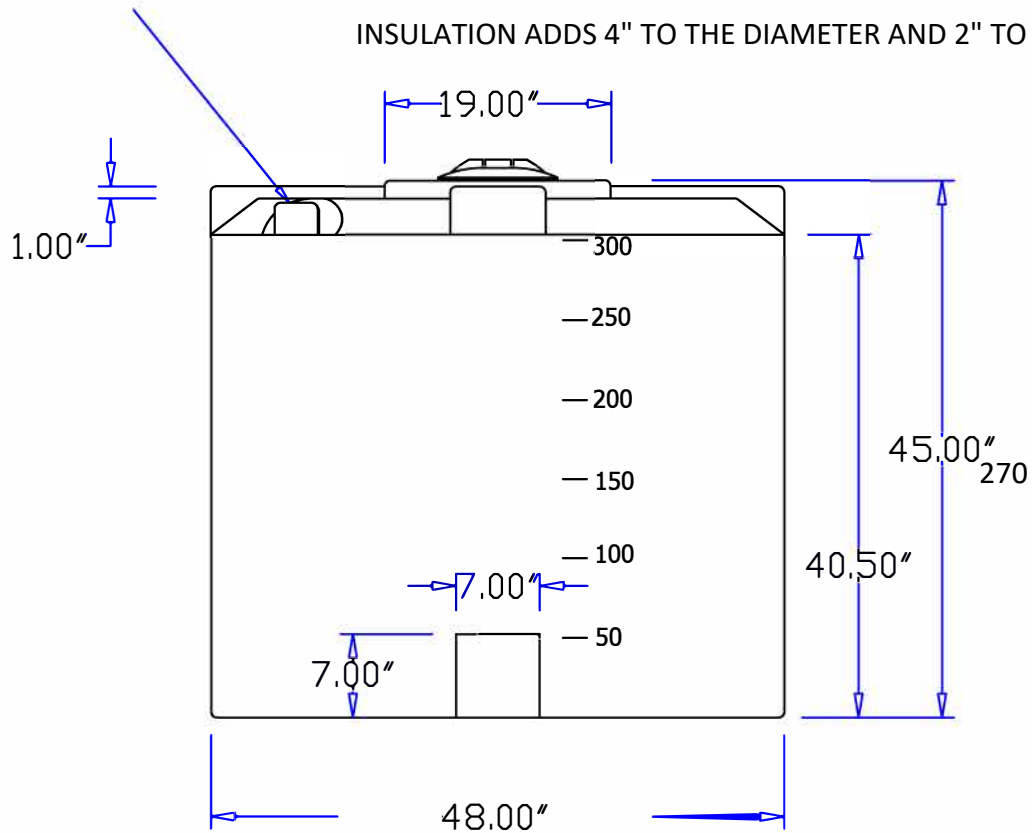

TOP VIEW

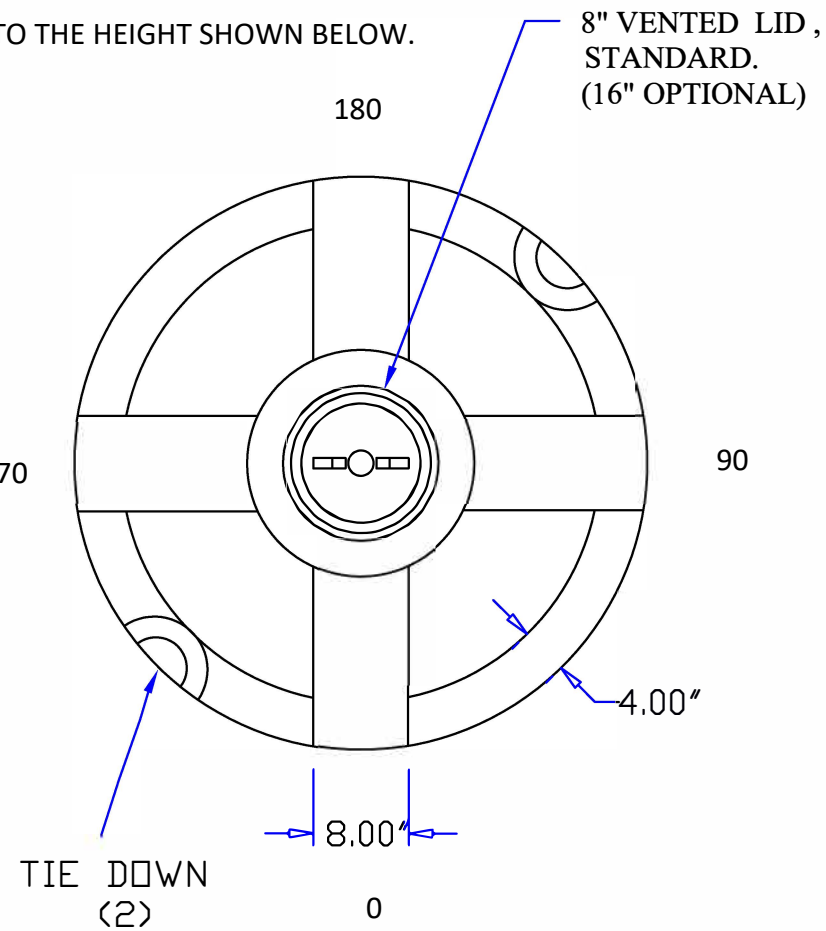

NOTE: CALIBRATED IN GALLONS

REV	DESCRIPTION	DATE	APPRD
1	CHANGE PART NO.	1/15/03	MPS

DRAWN / DATE: MPS/6/12/03

APPRD. / DATE:

MATERIAL / SHOT WEIGHT: 90/72 LBS.

ALL DIMENSIONS ARE IN DECIMAL INCHES
TOLERANCES UNLESS OTHERWISE SPECIFIED
± .5% @ 68° F

THIRD ANGLE PROJECTION
ANSI 14.5M

NOTES:

BAILIFF ENTERPRISES, INC.

CLIENT / DESCRIPTION: 300 GALLON VERTICAL TANK

SCALE: N.S.

PART NO.: VTB0300-48