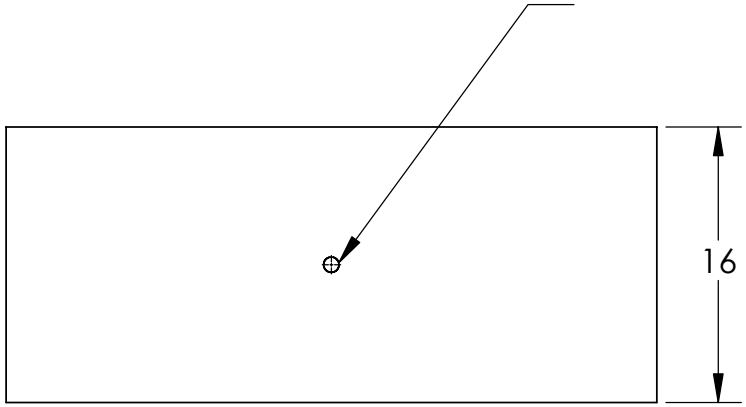

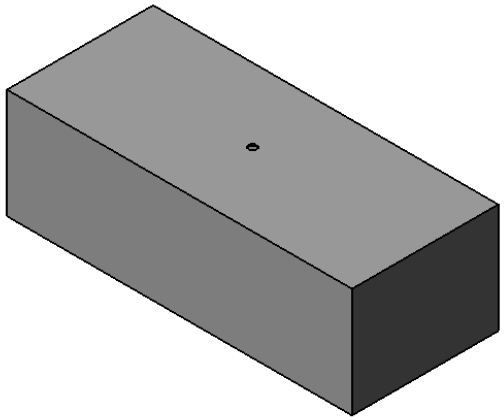

LIDS AVAILABLE : 2" CAP WITH LANYARD OR
4" LID WITH LANYARD

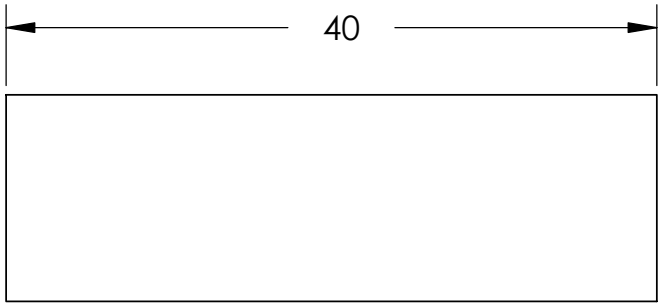

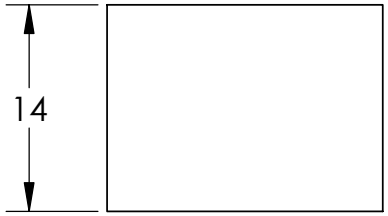

NOTE: TANK MAY STAND VERTICAL OR LAY FLAT AS SHOWN ABOVE.

		UNLESS OTHERWISE SPECIFIED:		NAME	DATE
		DIMENSIONS ARE IN INCHES TOLERANCES:	DRAWN	SYKES	1/19/05
			CHECKED		
			ENG APPR.		
			MFG APPR.		
		INTERPRET GEOMETRIC TOLERANCING PER:	Q.A.		
		MATERIAL	COMMENTS:		
NEXT ASSY	USED ON	FINISH			
APPLICATION		DO NOT SCALE DRAWING			

BAILIFF ENTERPRISES, INC.

TITLE: 40 GALLON RECTANGULAR TANK

SIZE	DWG. NO.	REV
A	RTB0040-40	
SCALE: 1:16	WEIGHT: 20 LBS	SHEET 1 OF 1

PROPRIETARY AND CONFIDENTIAL

THE INFORMATION CONTAINED IN THIS DRAWING IS THE SOLE PROPERTY OF BAILIFF ENTERPRISES, INC. ANY REPRODUCTION IN PART OR AS A WHOLE WITHOUT THE WRITTEN PERMISSION OF BAILIFF ENTERPRISES,INC. IS PROHIBITED.

5 4 3 2 1