MOLDED BY NORWESCO, INC.
BLACK POLYETHYLENE, UV STABILIZED
1.5 SPECIFIC GRAVITY
OPEN TOP CONTAINMENT BASIN
NO LID, NO FITTINGS
ONE-PIECE SEAMLESS ROTOMOLDED
CAPACITY: 1,500 GALLONS

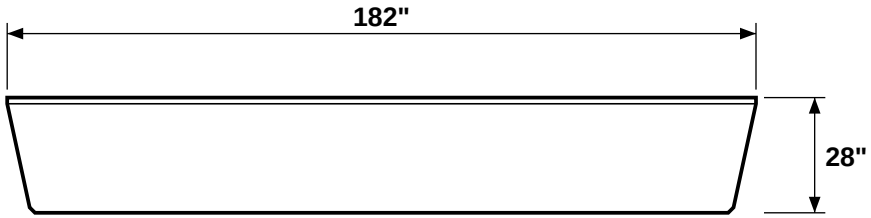

SIDE VIEW

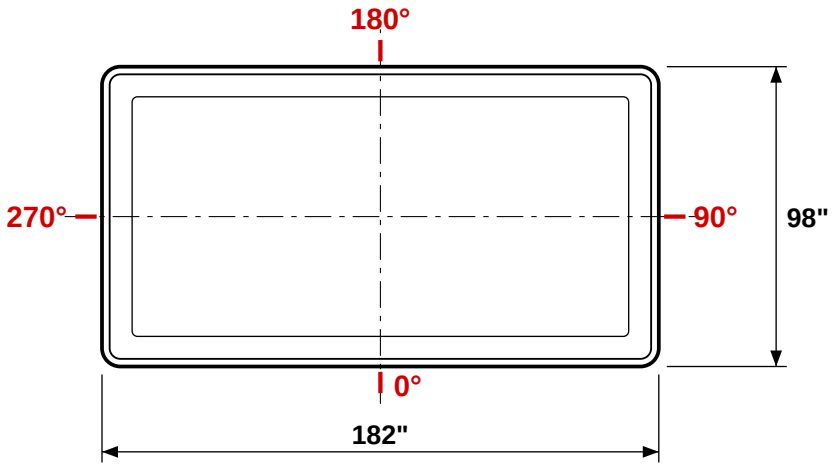

REV	DESCRIPTION	DATE	APPRD
A	NEW DRAWING	11-20-26	

All dimensions are in decimal inches
Tolerances unless otherwise specified
+/- 2% (molder's tolerance)

DRAWN BY / DATE
BEI / 11-20-26

APPROVED BY / DATE

THIRD ANGLE PROJECTION ANSI 14.5M

MATERIAL / SHOT WEIGHT
HDPE

NOTES:
DIMENSIONS PER MOLDER (NORWESCO, INC.)

BAILIFF ENTERPRISES, INC.
305 E. Rogers Road, Willis, TX 77378
plasticstoragetanks.com

CLIENT/DESCRIPTION
1,500 GALLON CONTAINMENT BASIN

SCALE
N.S.

PART NUMBER
CTN1500-184BLK